ABSTRACT

The traffic accident detection is becoming one of the interesting fields due to its tremendous application in intelligent transportation systems. Main causes behind these road accidents are lack of unskilled drivers, consuming alcohol while driving, over speed, sleep while driving. Plenty of solutions have been applied to prevent these road accidents. But most of them were failed to prevent this. In this work we present an advanced accident detection using LIFI technology. This work provides an intelligent system for accident prevention and detection for human life safety. That prevention part has various sensor like eye blink sensor, alcohol sensor and ultrasonic sensor. If the sensor detects whether the rider consumes alcohol or the distance between two vehicles is low then it sends that information to another vehicle which is going in front it. So that they can be wide awake and if the driver is sleeping while driving means then the eye blink sensor detects it and give an alert to the driver.

CONTENTS

CHAPTER NO.	TITLE	PAGE NO.
	ABSTRACT	I
	LIST OF FIGURES	VI
	LIST OF ABBREVATIONS	VII
	LIST OF TABLES	X
1	INTRODUCTION	1
	1.1 INTRODUCTION	2
	1.2.1 LITERATURE SURVEY	3
2	EXISTING SYSTEM	6
	2.1 EXISTING METHODOLOGY	6
	2.2 DISADVANTAGES	8
3	PROPOSED SYSTEM	9
	3.1 ADVANTAGES 1	10
	3.1.1 FRONT CAR	10
	3.1.2 BACK CAR	11
4	HARDWARE AND SOFTWARE	12
	4.1 HARWARE DESCRIPTION	12
	4.1.1 CO2 SENSOR	13
	4.1.2 ULTRASONIC SENSOR	15
	4.1.3 IR MODULE	16
	4.1.4 ALCOHOL SENSOR	17
	4.1.5 EYE BLINK SENSOR	19

4.1.6 ARDUINO 20
4.1.7 UART 23
4.1.7.1 DATA FRAMING 24
4.1.8 LCD DISPLAY 27
4.1.9 BUZZER 31
4.2 ARDUINO SOFTWARE (IDE) 33
5 CONCLUTION AND FUTURE WORK 36
CODINGS 37
REFERENCE 51

LIST OF FIGURES

FIGURE NO.	TITLE	PAGE NO.
4.1	FRONT SIDE OF THE CAR	17
4.1.1	BACK SIDE OF THE CAR	18
5.1	GAS SENSOR	20
5.1.1	ULTRASONIC SENSOR	22
5.1.3	IR MODULE	25
5.1.4	EYEBLINK SENSOR	26
5.1.5	ARDUINO BOARD	28
5.1.7	LCD DISPLAY	35
5.1.8	BUZZER	38
5.1.9	ARDUINO IDE	40
6.1	LIFI TRANSMITTER	57
6.1.1	LIFI RECEIVER	58

LIST OF TABLES

FIG NO	TITLE	PAGE NO
5.1.7	DATA FRAMING	31

LIST OF ABBREVIATION

LI-FI	Light fidelity
O-OFDM	Optical orthogonal frequency division multiplexing
MAC	Media access control
TCP	Transmission control Protocol
CSK	Colour shift Key
OOK	On Off Keying
VPPM	Variable pulse position Modulation
VLC	Visible light Communication
OEM	Original equipment Manufacturer
LED	Light Emitting Diode
LCD	Liquid Crystal Display
ADC	Analog to Digital converter
IDE	Integrated design environment
UART	Universal Asynchronous Receiver Transmitter
DCV	Demand controlled ventilation
NDIR	Non dispersive infrared sensor
IR	Infrared

CHAPTER1
INTRODUCTION

1.1 INTRODUCTION

Li-Fi is a derivative of optical wireless communications (OWC) technology, which uses light from light-emitting diodes (LEDs) as a medium to deliver network, mobile, high-speed communication in a similar manner to Wifi.

It is wireless and uses visible light communication or infra-red and near ultraviolet (instead of radio frequency waves) spectrum, part of Optical wireless communications technology, which carries much more information and has been proposed as a solution to the RF-bandwidth limitations. A complete solution includes an industry led standardization process.

As coined by Prof. Harald Haas during his TED Global talk, is bidirectional, high speed and fully networked wireless communications similar to Wi-Fi. Li-Fi is a subset of optical wireless communications (OWC) and can be a complement to RF communication (Wi-Fi or Cellular network), or a replacement in contexts of data broadcasting.

This OWC technology uses light from light-emitting diodes (LEDs) as a medium to deliver networked, mobile, high-speed communication in a similar manner to Wi-fi, Li-Fi could lead to the Internet of things which is everything electronic being connected to the internet, with the LED lights on the electronics being used as Li-Fi internet access points.The Li-Fi market is projected to have a compound annual growth rate of 82% from 2013 to 2018 and to be worth over $6 billion per year by 2018.Visible light communications (VLC) works by switching bulbs on and off within nano seconds which is too quickly to be noticed by the human eye.

Although Li-Fi bulbs would have to be kept on to transmit data, the bulbs could be dimmed to the point that they were not visible to humans and yet still functional.

The light waves cannot penetrate walls which makes a much shorter range, though more secure from hacking, relative to Wi-Fi. Direct line of sight isn't necessary for Li-Fi to transmit a signal; light reflected off the walls can achieve 70 Mbps Li-Fi has the advantage of being useful in electromagnetic sensitive areas such as in aircraft cabins, hospitals and nuclear power plants without causing Electromagnetic-Interference Both Wi-Fi and Li-Fi transmit data over the electromagnetic spectrum but whereas WiFi utilizes radio waves, Li-Fi uses visible light.

While the US Federal Communications Commission has warned of a potential spectrum crisis because Wi-Fi is close to full capacity, Li- Fi has almost no limitations on capacity. The visible light spectrum is 10,000 times larger than the entire radio frequency spectrum. Researchers have reached data rates of over 10 Gbps, which is more than 250 times faster than superfast broadband Li-Fi is expected to be ten times cheaper than Wi-Fi. Short range, low reliability and high installation costs are the potential downsides.

Pure LI-FI demonstrated the first commercially available Li-Fi system, the Li-1st, at the 2014 Mobile World Congress in Barcelona. Bg-Fi is a Li-Fi system consisting of an application for a mobile device, and a simple consumer product, like an IoT (Internet of Things) device, with color sensor, microcontroller, and embedded software. Light from the mobile device display communicates to the color sensor on the consumer product, which converts the light into digital information. Light emitting diodes enable the consumer product to communicate synchronously with the mobile device.

1.2 STANDARDS

Like wi-fi, LiFi is wireless and uses similar 802.11 protocols; but it uses visible light communication (instead of radio frequency waves), which has much wider bandwidth.

One part of VLC is modeled after communication protocols established by the IEEE 802 workgroup. However, the IEEE 802.15.7 standard is out-of-date, it fails to consider the latest technological developments in the field of optical wireless communications, specifically with the introduction of optical orthogonal frequency-division multiplexing (OOFDM) modulation methods which have been optimized for data rates, multiple-access and energy efficiency. The introduction of O-OFDM means that a new drive for standardization of optical wireless communications is required.

Nonetheless, the IEEE 802.15.7 standard defines the physical layer (PHY) and media access control (MAC) layer. The standard is able to deliver enough data rates to transmit audio, video and multimedia services. It takes into account optical transmission mobility, its compatibility with artificial lighting present in infrastructures, and the interference which may be generated by ambient lighting. The MAC layer permits using the link with the other layers as with the TCP/IP protocol.

The standard defines three PHY layers with different rates:

- The PHY I was established for outdoor application and works 11.67 kbit/s to 267.6 kbit/s.
- The PHY II layer permits reaching data rates from 1.25 Mbit/ 96 Mbit/s.
- The PHY III is used for many emissions sources with a particular modulation method called color shift keying (CSK).PHY III can deliver rates from 12 Mbit/s to 96 Mbit/s.

The modulation formats recognized for PHY I and PHY II are on-off

keying (OOK) and variable pulse position modulation (VPPM). The Manchester coding used for the PHY I and PHY II layers includes the clock inside the transmitted data by representing a logic 0 with an OOK symbol "01" and a logic 1 with an OOK symbol "10", all with a DC component. The DC component avoids light extinction in case of an extended run of logic 0's.

APPLICATIONS

- Under water communication
- Cellular communication
- Localized advertising
- Intelligent transportation system
- Indoor navigation connectivity

CHAPTER 2

LITERATURE REVIEW

In this paper, “Outdoor Visible Light Communication for inter-vehicle communication using Controlled Area Network” was done by D. R. Kim [3].This paper have highlighted vehicle to vehicle communication system that does not require a tracking global positioning System or even a Wi-Fi or 3G wireless connectivity. It was proposed to use Programmable Interface Controller (PIC) sonar which sends 40 KHz short pulse of sound that is undetectable by human ear. The echo of the signal will be detected by microcontroller. The distance is calculated by the time required for echo signal to be transmitted and received .

In this paper , “Optical Vehicle-to-Vehicle Communication System using LED Transmitter and Camera Receiver” was done by I. Takai .This paper discussed about to develop a cost effective yet inexpensive mechanism for vehicle to vehicle which is light. Recently, light emitting diode (LED) based optical wireless communication (OWC) systems have been developed. Especially, an OWC technology using visible light communication (VLC), has been receiving much attention. The LED is suitable as an optical-signal-sending device because light intensity of the LED can be modulated at high speed in comparison with traditional lighting devices, such as incandescent bulbs and florescent lamps. Furthermore, LEDs are inexpensive, already used for lighting and sign-ages, and have high energy efficiency and long operating life. Moreover, basic performances of LEDs are being improved constantly .

In this research paper, “Visible light communication applied on vehicle-to-vehicle networks” was done by I.S.Santos. This paper discussed about a low-cost Vehicle-to-vehicle Communication (V2V) using the concept of Visible Light Communication (VLC). By modulating the vehicle's tail lights, it is possible to transmit event-based messages with the current status of the car. To achieve this, a miniature model was created using high-bright LEDs and controlled environmental conditions to avoid external interferences.

In this research paper,”A vehicle-to-vehicle communication protocol for cooperative collision warning” was done by X. Yang. This paper proposed the vehicle-to-vehicle communication protocol for cooperative collision warning. Emerging wireless technologies for vehicle-to-vehicle (V2V) and vehicle-to-roadside (V2R) communications such as DSRC are promising to dramatically reduce the number of fatal roadway accidents by providing early warnings. One major technical challenge addressed in this paper is to achieve low-latency in delivering emergency warnings in various road situations. Based on a careful analysis of application requirements, we design an effective protocol, comprising congestion control policies, service differentiation mechanisms and methods for emergency warning dissemination. Simulation results demonstrate that the proposed protocol achieves low latency in delivering emergency warnings and efficient bandwidth usage in stressful road scenarios.

CHAPTER 3

EXISTING METHODOLOGY

The existing system requires a transmitter and receiver in each vehicle in both rear and front sides of the vehicle. Thus more scenarios will be applicable. For the time being, we describe two scenarios that will be studied in the existing sytem.

A message will be sent through the transmitter which is placed in rear lights to vehicle 2. Then the message will be received by vehicle 2 using the photodiode which is placed at the front of vehicle 2. A notice of (Slow DOWN) will be then displayed in vehicle 2 using LCD display .The information will be received by photodiode in vehicle 2 and compared to vehicle 2 speeds. If the vehicle 2 is about to cross the junction while vehicle 1 is moving with a high speed, the driver will be alerted to check the other vehicle which is around in the area.

3.1 SUMMARY

Large numbers of road accidents are taking place all over the world due to the collision between vehicles. More than 1.2 million peoples died in road accidents in 2018, according to world health organization (WHO). Human safety is very important. The project idea is proposed to reduce the consequences of accidents in our daily lives and avoid collision between vehicles. There are various reasons for such adverse condition that results in death or disabilities. This includes

sudden loss of driver's concentration, brake fails, loss of stability. These hazardous conditions can be overcome if there is communication protocol used in all vehicles and depending on their position drivers control the vehicles to avoid accidents.

There are various vehicular communication system prototypes are available i.e., 5.9 GHz Dedicated Short Range Communication and Vehicular AdHoc network. These radio frequency (RF) based communication system has some limitations i.e., interference, congested spectrum and security. These limitations can be overcome by using Visible Light Communication (VLC).

It provides high bandwidth, security, interference immunity, and high data rate. VLC is a data communication system which uses visible light for high data transmission and reception. This technology is known as Light Fidelity (LiFi).

This work presents the novel method to avoid collision between two vehicles i.e. front and rear vehicles. The proposed Li-Fi based Vehicular to Vehicular (V2V) communication system is a cost effective solution with high data rate capabilities.

3.2 DISADVANTAGE

- All the details of the road conditions from the first vehicle can be known only when the user is inside the car .
- The exact latitude & longitude parameters of the vehicle cannot be known.
- The challenges faced by Wi-Fi in today's time are Capacity Availability Efficiency Security.
- Police intervention is needed
- Rate of accident is no reduced

CHAPTER 4

PROPOSED SYSTEM

The proposed system is carried out using LIFI technology. The LIFI system has been connected to each vehicle. That li-fi system is used to transmit and receive information form a vehicle. Here, In this proposed system we have used various sensor like eye blink sensor, ultrasonic sensor, mems sensor and alcohol sensor. These sensor has been connected with a microcontroller to each vehicle.

If the rider consumes alcohol then the alcohol sensor senses it and give that information to the nearest vehicle going in front of it through LIFI. Because while drunk and driving the rider may ride with over speed and it may hit the other vehicles which results accidents.

The rider should follow a particular distance with other vehicle. When the vehicle really close to next vehicle then the ultrasonic sensor detects it and transmit that information through LIFI. This will help to reduce the accidents.Mems sensor senses axis of the car,when there is a tilt in axis, it will send message. This mems sensor will help to detect in case of rash driving. And that information will be shared with the help of lifi technology.Here, we used one more sensor called eye blink sensor that detects the drowsiness of a rider which could alert the driver before mishap happens. We have connected an alarm system for that. Here we have used a liquid crystal display to monitor all these parameters

ADVANTAGES

- Alcohol consumption has been detected.
- Vehicle to vehicle communication has been improved.
- Drowsiness of a rider can be detected and safety measures can be taken
- Li-fi technology helps to communicate two microcontrollers with ease
- Engine speed can be controlled automatically
- Accident occurrence detection is achieved

BLOCK DIAGRAM

FRONT SIDE OF THE CAR

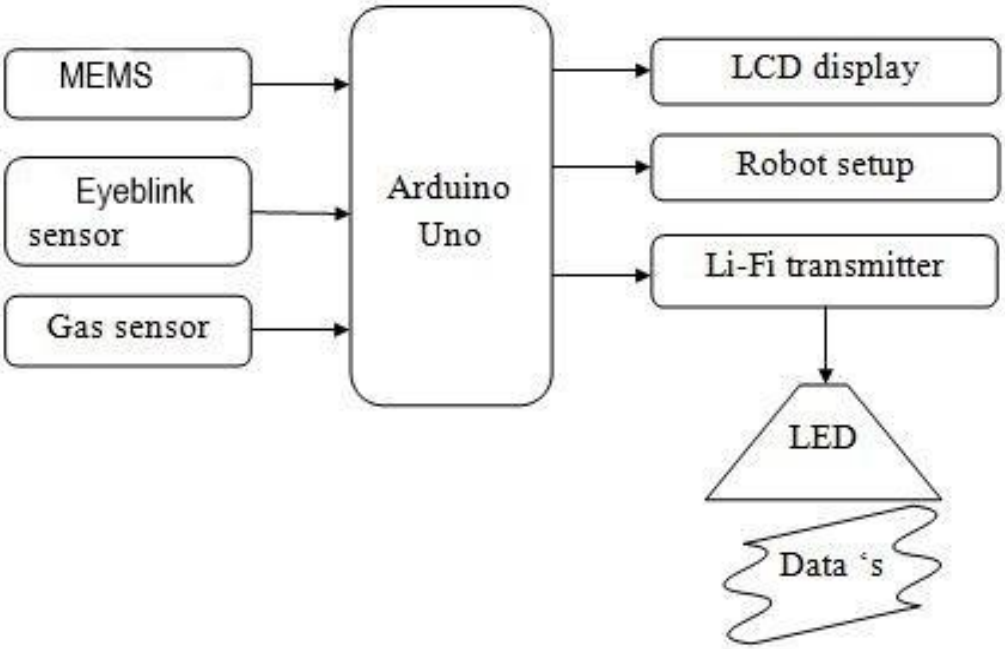

FIG 4.1. FRONT SIDE OF THE CAR

BACK SIDE OF THE CAR

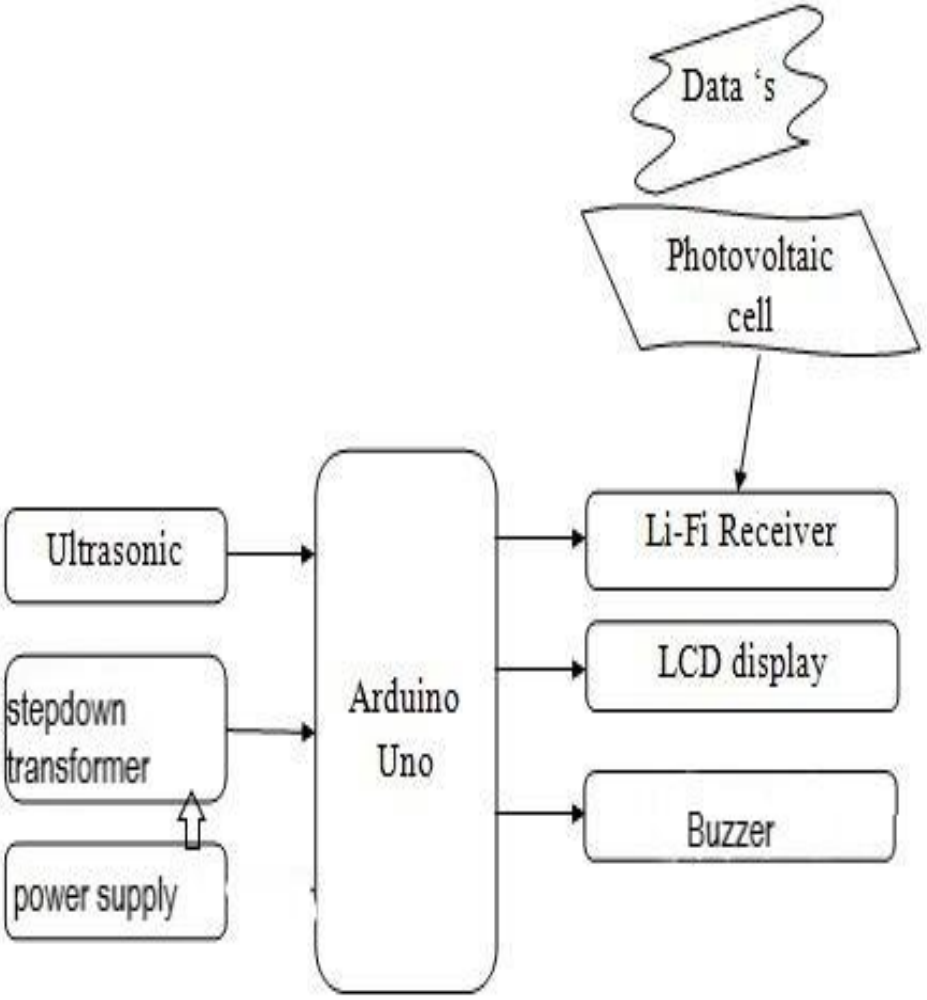

FIG 4.1.1 BACK SIDE OF THE CAR

CHAPTER 5

HARDWARE AND SOFTWARE

5.1HARDWARE DESCRIPTION

5.1.1 CO2 SENSOR

The CO2 sensor is a chemical optical sensor utilizing the acidic nature of CO2 for detection. It consists of a gas-permeable membrane in which a pH-sensitive luminescence dye is immobilized together with a buffer and an inert reference luminescent dye. CO2 permeating into the membrane changes the internal pH of the buffer. With this changes the luminescence of the pH-sensitive dye. Together with the inert reference dye internal referencing is made for detection of the luminescence lifetime of the sensor. The measurement signal detected by the pCO2 mini correlates to the partial pressure of CO2ambient.

APPLICATIONS

- Modified atmospheres
- Indoor air quality
- Stowaway detection
- Cellar and gas stores
- Marine vessels

- Greenhouses
- Landfill gas

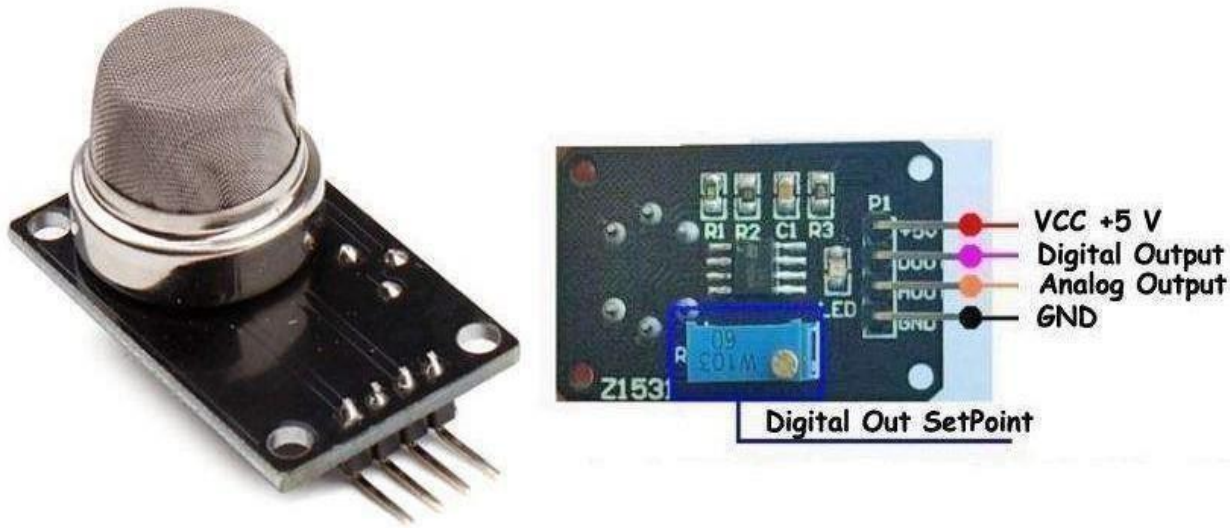

FIG NO 5.1 GAS SENSOR

MQ-2 SPECIFICATION

MQ-2 gas sensor has high sensitivity to LPG, Propane and Hydrogen, also could be used to Methane and other combustible steam, it is with low cost and suitable for different application.

CHARACTER:

*Good sensitivity to Combustible gas in wide range
* High sensitivity to LPG, Propane and Hydrogen
* Long life and low cost
* Simple drive circuit

5.1.2.ULTRA SONIC SENSOR:

GENRAL DESCRPTION:

Ultrasonic sensors work on a principle similar to sonar which evaluates distance of a target by interpreting the echoes from ultrasonic sound waves. This ultrasonic module measures the distance accurately which provides 0cm - 400cm with a gross error of 3cm. Its compact size, higher range and easy usability make it a handy sensor for distance measurement and mapping. The module can easily be interfaced to micro controllers where the triggering and measurement can be done using two pin. The sensor transmits an ultrasonic wave and produces an output pulse that corresponds to the time required for the burst echo to return to the sensor. By measuring the echo pulse width, the distance to target can easily be calculated. Features non-contact measurement with blinding from 0-1cm*.

NOTE:- * Results of measurement in this range are not accurate and reproducible in our test, but distance measurement beyond 1cm are accurate.

FEATURE

- EASY TO USE 4-PIN BREAKOUT.
- RANGE: 2CM-400CM NON CONTACT MEASUREMENT FUNCTION.
- RANGING ACCURACY: ±3CM (INCREMENTAL TOWARDS MAXIMUM RANGE).
- MEASURE ANGLE: 15º.
- OPERATES ON 40KHZ ULTRASONIC FREQUENCY RANGE.
- OPERATING VOLTAGE OF 4.8 V TO 5.5 V (± 0.2V MAX).

- OPERATING TEMPERATURE RANGE: 0C TO 60C (± 10%).
- SEPARATE INPUTS FOR TRIGGER AND RECEIVED ECHO.

PIN DESCRPTION:

With the sensor oriented as shown alongside, locate Pin-1 as the 1st pin (refer figure 1) on the left hand side.

FIG NO 5.1.1 ULTRASONIC SENSOR

MALE CONNECTOR SIDE

Pin no	Sign al
1	VCC (5V supply)
2	Trigger pulse input
3	Echo pulse output
4	GND(0V)

SPECIFICATIONS

parameter	specification
Dimensions	45 x 20 x 15 mm
Pin-	2.54mm male
Interface	VCC, GND,

5.1.3. IR MODULE

Infra-red sensors are the most often used sensor by amateur roboteers. Understanding how they behave can help address many of your requirements and would suffice to address most of the problem statements for various robotics events in India

. Be it a typical white/black line follower, a wall follower, obstacle avoidance, micro mouse, an advanced flavour of line follower like red line follower, etc, all of these problem statements can be easily addressed and granular control can be exercised upon your robots performance if you have a good operational understanding of Infra-red sensors.

CONSTRUCTION OF IR MODULE

Infra-red sensors are in the form of diodes with 2 terminals. You can buy a pair of such diode (one transmitter and one receiver) at a very low cost of about 5 - 7 rupees only. Here onwards, we will use Tx to refer to a transmitter and Rx to refer to a receiver diode.

When the Tx is forward biased, it begins emitting infra red. Since it's not in visible spectrum, you will not be able to see it through naked eyes but you will be able to view it through an ordinary cell phone camera.

THIS IS HOW A TYPICAL TX/RX LOOKS LIKE:

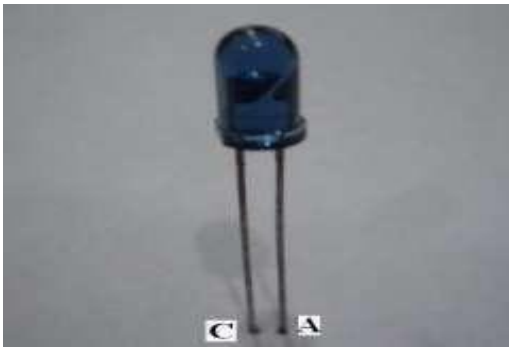

FIG NO 5.1.3 LED

Upon careful observation, you will notice that amongst the two 'legs', one has a much wider base within the diode. That is normally the cathode (negative) whereas the leg having a smaller base would be the anode (positive terminal).

TYPICAL TRANSMITTER CIRCUIT

The resistance R1 in the above circuit can vary. It should not be a very high value (~ 1Kohm) as then the current flowing through the diode would be very less and hence the intensity of emitted IR would be lesser. By increasing the current flowing in the circuit, you can increase the effective distance of your IR sensor. However, there are drawbacks of reducing the resistance. Firstly, it would increase the current consumption of your circuit and hence drain the battery (one of thefew

5.1.4 ALCOHOL SENSOR

Alcohol Sensor for use in Breathalyzer's or in an alarm unit, to detect the presence of alcohol vapors. This sensor unit offers very high sensitivity, combined with a fast response time. The unit will work with a simple drive circuit and offers excellent stability with long life. When all the acetic acid is cleared out of the FUEL CELL, the instrument is ready to analyze another sample.

FIG NO 5.1.3 IR MODULE

CHARACTER

* High sensitivity

* Fast response and resume

* Long life and low cost

* Mini Size

APPLICATION

- It has good sensitivity and fast response to alcohol, suitable forportable alcohol detector.

SPECIFICATIONS

- Supply Voltage =12V DC
- Current IH 120±20mA
- Power PH ≤ 140 mW

5.1.5 EYE BLINK SENOR

This project involves measure and controls the eye blink using IR sensor. The IR transmitter is used to transmit the infrared rays in our eye. The IR receiver is used to receive the reflected infrared rays of eye. If the eye is closed means the output of IR receiver is high otherwise the IR receiver output is low. This to know the eye is closing or opening position. This output is give to logic circuit to indicate the alarm. This project involves controlling accident due to unconscious through Eye blink. Here one eye blink sensor is fixed in vehicle where if anybody looses conscious and indicate through alarm.

The Eye Blink switch requires one 9V battery. Alkaline batteries are recommended because they last longer. Do not use rechargeable batteries because they supply lower voltage and the unit may not perform as well. To access the battery compartment, you will need to slide the cover off on the back of the unit. Install the 9v battery into the compartment. Then simply slide the cover back on. Next you will need to select the switch mode; there are three choices of operation.

FIG NO 5.1.4 EYE BLINK SENSOR

FUNCTION:

This Eye Blink sensor is IR based , . The Variation Across the eye will vary as per eye blink . If the eye is closed means the output is high otherwise output is low. This to know the eye is closing or opening position. This output is give to logic circuit to indicate the alarm. This can be used for project involves controlling accident due to unconscious through Eye blink.

FEATURES:

- EYE BLINK indication by LED
- Instant output digital signal for directly
- Connecting to microcontroller
- Compact Size

5.1.6 ARDUINO

The Arduino Uno is a microcontroller board based on the ATmega328. It has 14 digital input/output pins (of which 6 can be used as PWM outputs), 6 analog inputs, a 16 MHz crystal oscillator, a USB connection, a power jack, an ICSP header, and a reset button. It contains everything needed to support the microcontroller; simply connect it to a computer with a USB cable or power it with a AC-to-DC adapter or battery to get started.

The Uno differs from all preceding boards in that it does not use the FTDI USB-to-serial driver chip. Instead, it features the Atmega8U2 programmed as a USB-to-serial converter.

"Uno" means one in Italian and is named to mark the upcoming release of Arduino 1.0. The Uno and version 1.0 will be the reference versions of Arduino, moving forward.

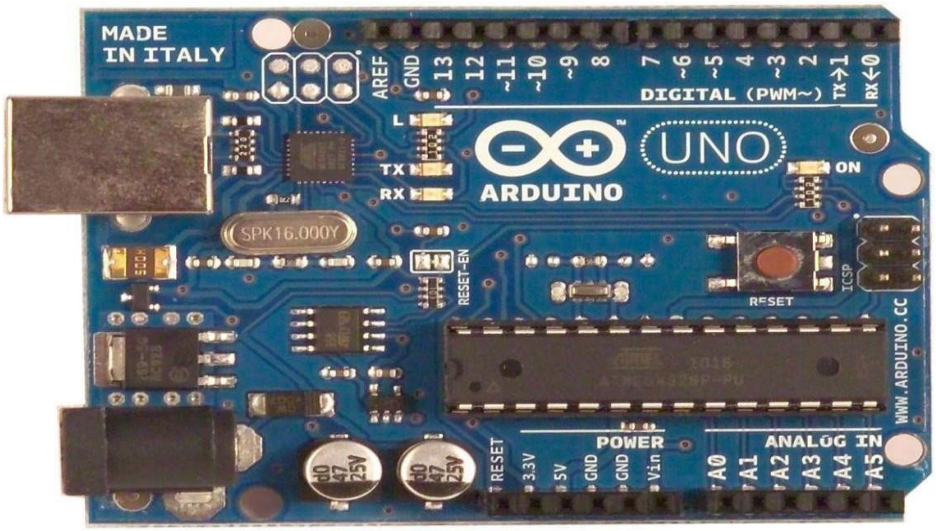

FIG5.1.5 ARDUINO BOARD

The Uno is the latest in a series of USB Arduino boards, and the reference model for the Arduino platform; for a comparison with previous versions.

POWER:

The Arduino Uno can be powered via the USB connection or with an external power supply. The power source is selected automatically. External (non- USB) power can come either from an AC-to-DC adapter (wall-wart) or battery. The adapter can be connected by plugging a 2.1mm center-positive plug into the board's power jack. Leads from a battery can be inserted in the Gnd and Vin pin headers of the POWER connector. The board can operate on an external supply of 6 to 20 volts. If supplied with less than 7V, however, the 5V pin may supply less than five volts and the board may be unstable. If using more than 12V, the voltage regulator may overheat and damage the board. The

recommended range is 7 to 12volts.

THE POWER PINS ARE AS FOLLOWS

· **VIN.** The input voltage to the Arduino board when it's using an external power source (as opposed to 5 volts from the USB connection or other regulated power source). You can supply voltage through this pin, or, if supplying voltage via the power jack, access it through this pin.

· **5V.** The regulated power supply used to power the microcontroller and other components on the board. This can come either from VIN via an on-board regulator, or be supplied by USB or another regulated 5V supply.

· **3V3.** A 3.3-volt supply generated by the on-board regulator. Maximum current draw is 50 mA.

· **GND.** Ground pins.

INPUT & OUTPUT

Each of the 14 digital pins on the Uno can be used as an input or output, using pin Mode(), digital Write(), and digital Read() functions. They operate at 5 volts. Each pin can provide or receive a maximum of 40 mA and has an internal

have specialized functions:

· **Serial: 0 (RX) and 1 (TX).** Used to receive (RX) and transmit (TX) TTL serial data. These pins are connected to the corresponding pins of the ATmega8U2 USB- to-TTL Serial chip .

· **External Interrupts: 2 and 3.** These pins can be configured to trigger an interrupt on a low value, a rising or falling edge, or a change in value. See the attach Interrupt () function for details.

· **PWM: 3, 5, 6, 9, 10, and 11.** Provide 8-bit PWM output with the analog Write() function.

.

5.1.7 UART

A universal asynchronous receiver/transmitter is a full form of the word that abbreviated **UART** /ˈjurat/, is a computer hardware device that translates data between parallel and serial forms. UARTs are commonly used in conjunction with communication standards such as TIA (formerly EIA)RS-232, RS-422 or RS-485. The *universal* designation indicates that the data format and transmission speeds are configurable. The electric signalling levels and methods (such as differential signalling etc.) are handled by a driver circuit external to the UART.

A UART is usually an individual (or part of an) integrated circuit (IC) used for serial communications over a computer or peripheral device serial port. UARTs are now commonly included in microcontrollers. A dual UART, or *DUART*, combines two UARTs into a single chip. An octal UART or *OCTART* combines eight UARTs into one package, an example being the NXP SCC2698. Many modern ICs now come with a UART that can also communicate synchronously; these devices are called *USARTs* (universal synchronous/asynchronous receiver/transmitter).

5.1.7.1 TRANSMITTING AND RECEIVING SERIAL DATA

The universal asynchronous receiver/transmitter (UART) takes bytes of data and transmits the individual bits in a sequential fashion.[1] At the destination, a second UART re-assembles the bits into complete bytes. Each UART contains a shift register, which is the fundamental method of conversion between serial and parallel forms. Serial transmission of digital information (bits) through a single wire or other medium is less costly than parallel transmission through multiple wires.

The UART usually does not directly generate or receive the external signals used between different items of equipment. Separate interface devices are used to convert the logic level signals of the UART to and from the external signalling levels. External signals may be of many different forms. Examples of standards for voltage

(in current loops) was used in telegraph circuits. Some signalling schemes do not use electrical wires. Examples of such are optical, IrDA (infrared), and (wireless) Bluetooth in its Serial Port Profile (SPP). Some signalling schemes use modulation of a carrier signal (with or without wires). Examples are modulation of audio signals with phone line modems, RF modulation with data radios, and the DC-LIN for power line communication.

Communication may be *simplex* (in one direction only, with no provision for the receiving device to send information back to the transmitting device), *full duplex* (both devices send and receive at the same time) or *half duplex* (devices take turns transmitting and receiving).

Bit number	1	2	3	4	5	6	7	8	9	10	11
	Start bit	**5–8 data bits**								**Stop bit(s)**	
	Start	Data 0	Data 1	Data 2	Data 3	Data 4	Data 5	Data 6	Data 7	Stop	

FIG 5.1.6 DATA FRAMING

The idle, no data state is high-voltage, or powered. This is a historic legacy from telegraphy, in which the line is held high to show that the line and transmitter are not damaged. Each character is sent as a logic low start bit, a configurable number of data bits (usually 8, but users can choose 5 to 8 or 9 bits depending on which UART is in use), an optional parity bit if the number of bits per character chosen is not 9 bits, and one or more logic high stop bits. In most applications the least significant data bit (the one on the left in this diagram) is transmitted first, but there are exceptions (such as the IBM 2741 printing terminal).

The start bit signals the receiver that a new character is coming. The next five to nine bits, depending on the code set employed, represent the character.

RECEIVER

All operations of the UART hardware are controlled by a clock signal which runs at a multiple of the data rate, typically 8 times the bit rate. The receiver tests the state of the incoming signal on each clock pulse, looking for the beginning of the start bit. If the apparent start bit lasts at least one-half of the bit time, it is valid and signals the start of a new character. If not, it is considered a spurious pulse and is ignored. After waiting a further bit time, the state of the line is again sampled and the resulting level clocked into a shift register. After the required number of bit periods for the character length (5 to 8 bits, typically) have elapsed, the contents of the shift register are made available (in parallel fashion) to the receiving system. The UART will set a flag indicating new data is available, and may also generate a processor interrupt to request that the host processor transfers the received data.

TRANSMITTER

Transmission operation is simpler as the timing does not have to be determined from the line state, nor is it bound to any fixed timing intervals. As soon as the sending system deposits a character in the shift register (after completion of the previous character), the UART generates a start bit, shifts the required number of data bits out to the line, generates and sends the parity bit (if used), and sends the stop bits. Since transmission of a single character may take a long time relative to CPU speeds, the UART maintains a flag showing busy status so that the host system does not deposit a new character for transmission until the previous one has been completed; "ready for next character" may also be signaled with an interrupt. Since full-duplex operation requires characters to be sent and received at the same time, UARTs use two different shift registers for transmitted and received characters.

APPLICATION

Transmitting and receiving UARTs must be set for the same bit speed, character length, parity, and stop bits for proper operation. The receiving UART may detect some mismatched settings and set a "framing error" flag bit for the host system; in exceptional cases the receiving UART will produce an erratic stream of mutilated characters and transfer them to the host system.

Typical serial ports used with personal computers connected to modems use eight data bits, no parity, and one stop bit; for this configuration the number of ASCII characters per second equals the bit rate divided by 10.

SYNCHRONOUS TRANSMISSION

USART chips have both synchronous and asynchronous modes. In *synchronous* transmission, the clock data is recovered separately from the data stream and no start/stop bits are used. This improves the efficiency of transmission on suitable channels since more of the bits sent are usable data and not character framing. An asynchronous transmission sends no characters over the interconnection when the transmitting device has nothing to send; but a synchronous interface must send "pad" characters to maintain synchronization between the receiver and transmitter. The usual filler is the ASCII "SYN" character. This may be done automatically by the transmitting device.

USARTs were often used to create data streams compatible with the synchronous telephonic data channels. The standard method would multiplex synchronous data from many terminals to a telephonic data line such as E1 (Europe) or T1 (US).

5.1.8 LCD DISPLAY

INTRODUCTION:

Liquid crystal cell displays (LCDs) are used in similar applications where LEDs are used. These applications are display of display of numeric and alphanumeric characters in dot matrix and segmental displays.

LCDS ARE OF TWO TYPES:

I. Dynamic scattering type
II. Field effect type

THE CONSTRUCTION OF A DYNAMIC SCATTERING LIQUID CRYSTAL CELL:

The liquid crystal material may be one of the several components, which exhibit optical properties of a crystal though they remain in liquid form. Liquid crystal is layered between glass sheets with transparent electrodes deposited on the inside faces. When a potential is applied across the cell, charge carriers flowing through the liquid disrupt the molecular alignment and produce turbulence. When the liquid is not activated, it is transparent. When the liquid is activated the molecular turbulence causes light to be scattered in all directions and the cell appear to be bright.

LCD consists of two glass panels, with the liquid crystal materials sandwiched in between them. The inner surface of the glass plates is coated with transparent electrodes which define in between the electrodes and the crystal, which makes the liquid crystal molecules to maintain a defined orientation angle. When a potential is applied across the cell, charge carriers flowing through the liquid will

disrupt the molecular alignment and produce turbulence.

When the liquid is not activated, it is transparent. When the liquid is activated the molecular turbulence causes light to be scattered in all directions and the cell appears to be bright. Thus the required message is displayed. When the LCD is in the off state, the two polarizer's and the liquid crystal rotate the light rays, suchthat they come out of the LCD without any orientation, and hence the LCD appears transparent.

FIG NO 5.1.7 LIQUID CRYSTAL DISPLAY

PIN DESCRIPTION FOR LCD:

PIN NO	**SYMBOL**	**FUNCTION**
1	Vss	Ground terminal of Module
2	Vdd	Supply terminal of Module, + 5v
3	Vo	Power supply for liquid crystal drive
4	RS	Register select RS=0…Instruction register RS=1…Data register
5	R/W	Read/Write R/W=1…Read R/W=0…Write
6	EN	Enable

7-14	DB0-DB7	Bi-directional Data Bus. Data Transfer is performed once ,thru DB0DB7,incase of interface data length is 8-bits;and twice, thru DB4-DB7 in the case of interface data length is 4-bits.Upper four bits first then lower four bits.
15	LAMP-(L-)	LED or EL lamp power supply terminals
16	LAMP+(L+) (E2)	Enable

LCD PIN DESCRIPTIONS:

The function of each pins of LCD is described below **VCC, VSS and VEE** while v and v provide +5v and ground, respectively, v is used for controlling LCD contrast.

RS, register select

There are two very important registers inside the LCD. The RS pin is used for their selection as follows. If RS=0, the instruction code register is selected, allowing the user to send a command such as clear display, cursor at home,etc.if RS=1 the data register is selected, allowing the user to send data to be displayed on theLCD.

R/W, read/write

R/W input allows the user to write information to the LCD or read information from it. R/W=1 when reading; R/W=0 when writing.

E, enable

The enable pin is used by the LCD to latch information presented on its data pins. When data is supplied to data pins, a high to low pulse must be applied to this pin in order for the LCD to latch in the data present at the data pins.

D0 - D7

The 8-bit data pins, D0 – D7, are used to send information to the LCD or read contents of the LCD'S internal registers. There are also instruction codes that can be sent to the LCD to clear the display or force the cursor to the home position or blink the cursor. RS=0 is used to check the busy flag bit to see if the LCD is ready to receive information. The busy flag is D7 and can be read when R/W=1 and RS=0, as follows: if R/W=1, RS=0.when D7=1, the LCD is busy taking care of internal operation and will not accept any new information, when D7=0, the LCD is ready to receive new information.

5.1.9BUZZER

A **buzzer** or **beeper** is a signaling device, The word "buzzer" comes from the rasping noise that buzzers made when they were electromechanical devices, operated from stepped-down AC line voltage at 50 or 60 cycles. Other sounds commonly used to indicate that a button has been pressed are a ring or a beep

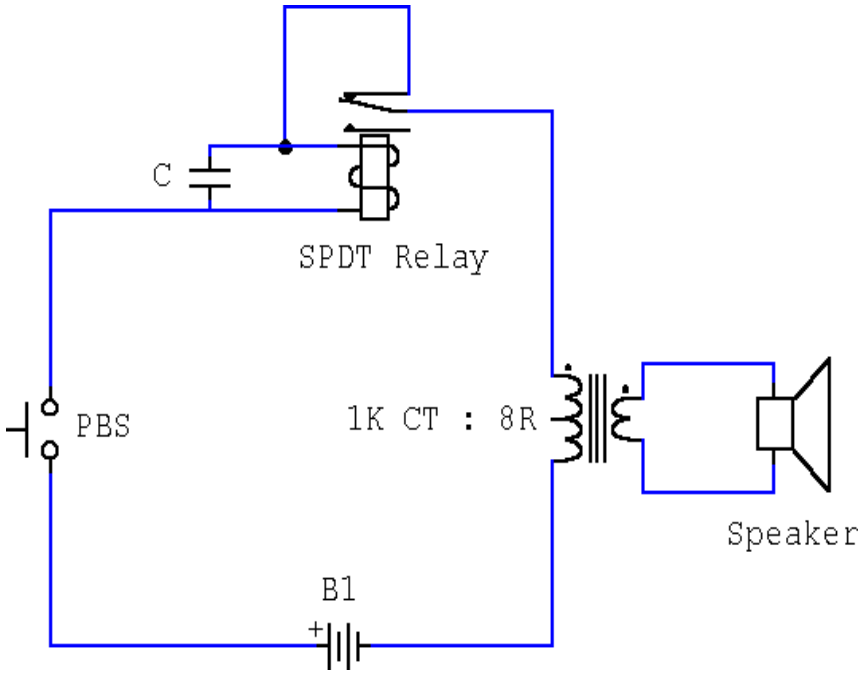

FIG 5.1.8 BUZZER

POWER SUPPLY

Power supply is a reference to a source of electrical power. A device or system that supplies electrical or other types of energy to an output load or group of loads is called a power supply unit or PSU. The term is most commonly applied to electrical energy supplies, less often to mechanical ones, and rarely to others.

Power supplies for electronic devices can be broadly divided into linear and switching power supplies. The linear supply is a relatively simple design that becomes increasingly bulky and heavy for high current devices; voltage regulation in a linear supply can result in low efficiency. A switched-mode supply of the same rating as a linear supply will be smaller, is usually more efficient, but will be more complex.

LINEAR POWER SUPPLY

An AC powered linear power supply usually uses a transformer to convert the voltage from the wall outlet (mains) to a different, usually a lower voltage. If it is used to produce DC, a rectifier is used. A capacitor is used to smooth the pulsating current from the rectifier. Some small periodic deviations from smooth direct current will remain, which is known as ripple. These pulsations occur at a frequency related to the AC power frequency (for example, a multiple of 50 or 60 Hz).

The voltage produced by an unregulated power supply will vary depending on the load and on variations in the AC supply voltage. For critical electronics applications a linear regulator will be used to stabilize and adjust the voltage

5.2.1ARDUINO SOFTWARE (IDE)

The Arduino Integrated Development Environment - or Arduino Software (IDE) - contains a text editor for writing code, a message area, a text console, a toolbar with buttons for common functions and a series of menus. It connects to the Arduino and Genuine hardware to upload programs and communicate with them.

Language Support

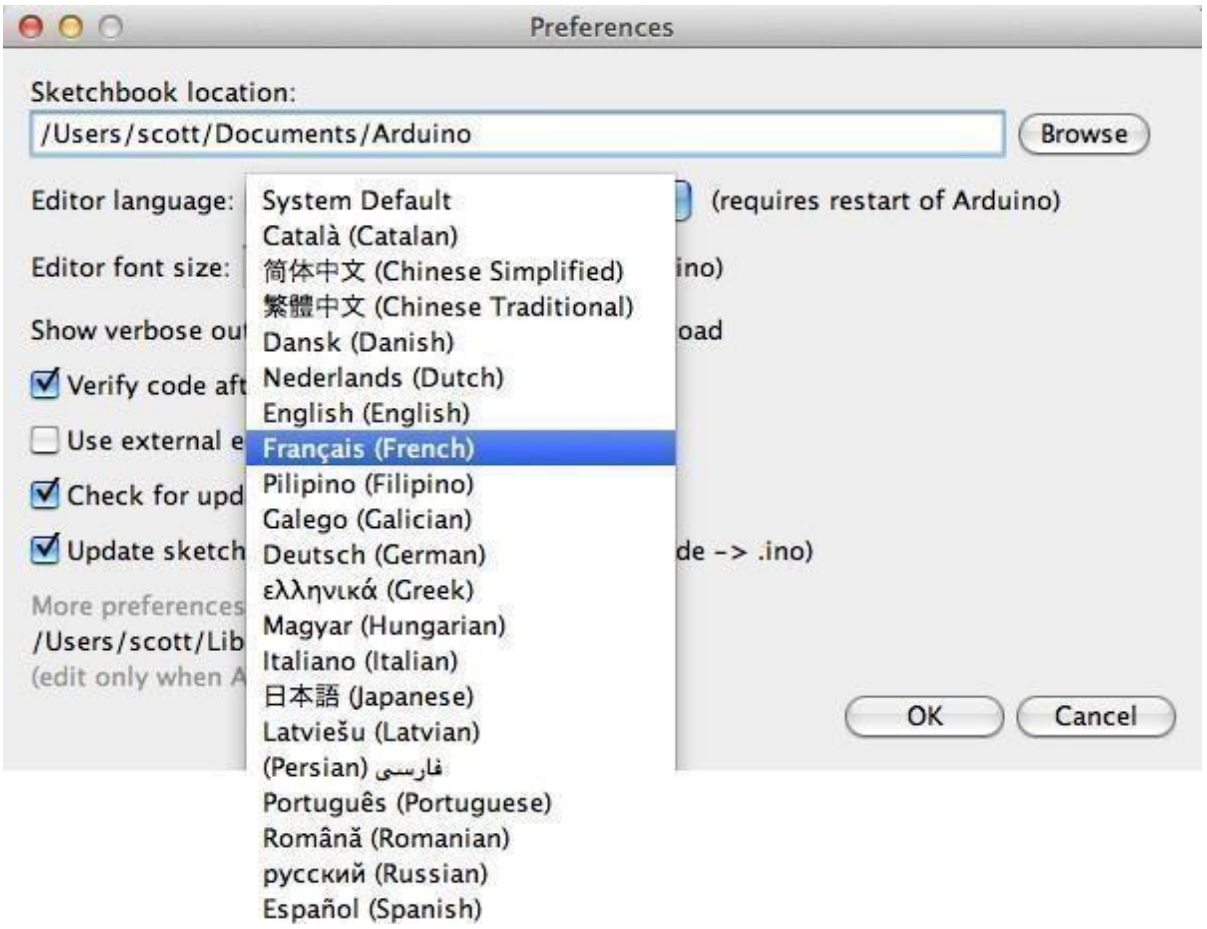

FIG 5.1.9. ARDUINO IDE

Since version 1.0.1 , the Arduino Software (IDE) has been translated into 30+ different languages. By default, the IDE loads in the language selected by your operating system. (Note: on Windows and possibly Linux, this is determined by the locale setting which controls currency and date formats, not by the language the operating system is displayed in.)

The board selection has two effects: it sets the parameters (e.g. CPU speed and baud rate) used when compiling and uploading sketches; and sets and the file and fuse settings used by the burn bootloader command. Some of the board definitions differ only in the latter, so even if you've been uploading successfully with a particular selection you'll want to check it before burning the bootloader. You can find a comparison table between the various boards here.

Arduino Software (IDE) includes the built in support for the boards in the following list, all based on the AVR Core. TheBoards Manager included in the standard installation allows to add support for the growing number of new boards based on different cores like Arduino Due, Arduino Zero, Edison, Galileo and so on.

- Arduino Yùn An ATmega32u4 running at 16 MHz with auto-reset, 12 Analog In, 20 Digital I/O and 7 PWM.
- Arduino/Genuino Uno An ATmega328 running at 16 MHz with auto-reset, 6 AnalogIn, 14 Digital I/O and 6 PWM.
- Arduino Diecimila or Duemilanove w/ ATmega168 An ATmega168 running at 16 MHz with auto-reset.
- Arduino Nano w/ ATmega328 An ATmega328 running at 16 MHz with auto-reset. Has eight analog inputs.

CHAPTER 6

CONCLUSION & FUTURE WORK

As a result of increased population, the number of accidents also increased. This is reduced to a great extent by this technology. The Li-Fi helps faster transfer of data between the vehicles. This technology can also be implemented in street lights for data transfer about the traffic. As it employs visible light for communication, this is not restricted in any places. There is no interference in the signals. Hence this technology is far better than other methods of data transfer. It will allow inter access in places such as operation theatres and aircrafts where internet access is usually not allowed. If this technology can be used efficiently, we might soon have something of the kind of WI-FI hotspots wherever a light bulb is available. It will be cleaner and greener and the future of mankind will be safe. Since this technology has a vast potential, many researches are being conducted in this field.

In this fast changing world as a result of increased population, the number of accidents also increased. This is reduced to a great extent by this technology. The Li-Fi helps faster transfer of data between the vehicles. This technology can also be implemented in street lights for data transfer about the traffic. As it employs visible light for communication, this is not restricted in any places. There is no interference in the signals. Hence this technology is far better than other methods of data transfer. It will allow inter access in places such as operation theatres and aircrafts where internet access is usually not allowed. If this technology can be used efficiently, we might soon have something of the kind of WI-FI hotspots wherever a light bulb is available. It will be cleaner and greener and the future of mankind will be safe. Since this technology has a vast potential, many researches are being conducted in this field. In this method along with the distance measurement, drunkard drive indication

and overtake guidance switch, the speed sensors can also be added to measure the speed of the cars.

FUTURE WORK

One of the most important trends for the future is the Internet of Things (IoT). The key requirements for it include:

- Security of the wireless data
- Power for sensors
- Wireless capacity for communications

The convergence between lighting and wireless communications gives birth to a new age of smart buildings and the IoT. Philips Lighting, now partnering with Cisco, used Power over Ethernet (PoE) as the basis for a smart building at the Deloitte HQ in Amsterdam. The installation was 50% cheaper than the equivalent traditional installation.5

In addition to immediate cost savings, the Ethernet backbone with constantly available power enables every light to become a hub for a host of sensors.

CODINGS

TRANSMITTER

```
#include <math.h>
const int x_out = A3; /* connect x_out of module to A1 of UNO board */
const int y_out = A4; /* connect y_out of module to A2 of UNO board */
const int z_out = A5; /* connect z_out of module to A3 of UNO board*/
const byte blinkPin = 7;            // change this to fit your circuit
byte oldBlinkState = HIGH;          // assume eye open (or supplyinit/calibrate
routine)
const unsigned long debounceTime = 10; // milliseconds unsigned
long blinkStartAt;                  // when the blink started
unsigned long oldBlinkStartAt; // when the previous blink started
unsigned long unBlinkStartAt;   // when blink ended
unsigned long tweenTime;            // time since last blink
unsigned long blinkTime;
unsigned long;
void setup() {
 Serial.begin(9600);

 pinMode(A0,INPUT); // gas
  pinMode(A1,INPUT);
```

```
  pinMode(A2,INPUT);

pinMode (blinkPin, INPUT_PULLUP);
pinMode(10,OUTPUT);
pinMode(11,OUTPUT);
}

void pwm()
{
  for(int i=255;i>=0;i--)
  {
    analogWrite(3,i);
    digitalWrite(2,0);
    delay(50);
  }
}
void loop()
{

 int gas,mems;
 gas=analogRead(A0);
 gas=gas*0.4848;
 mems=analogRead(A1);
```

```
 mems=mems*0.4848; int sleep;
        sleep=analogRead(A2);
  sleep=sleep*0.4848;

//Serial.print("gas = ");
//Serial.println(gas);
//delay(1000);
analogWrite(10,255);
digitalWrite(11,0);

int   x_adc_value,   y_adc_value,   z_adc_value;
  double x_g_value, y_g_value, z_g_value;

  x_adc_value = analogRead(x_out); /* Digital value of voltage on x_out pin*/
  y_adc_value = analogRead(y_out); /* Digital value of voltage on y_out pin*/

  z_adc_value = analogRead(z_out); /* Digital value of voltage on z_out pin */
//   Serial.print("x = ");
// Serial.print(x_adc_value);
// Serial.print("\t\t");
// Serial.print("y = ");
// Serial.print(y_adc_value);
// Serial.print("\t\t");
// Serial.print("z = ");
```

```
// Serial.print(z_adc_value);
// Serial.print("\t\t");
// delay(100);


if (mems>=60)
{ Serial.print(mems);
  Serial.print('a');
  delay(1500);
 }
   if(gas>=42)
{Serial.print(gas);
  Serial.println('b');
  delay(1500);
pwm();
delay(100);
analogWrite(10,0);
digitalWrite(11,0);
delay(2500);

 }
 else
 {
```

```
  analogWrite(10,255);
 digitalWrite(11,0);
  }
  if(sleep>=60)
{Serial.print(sleep);


          Serial.print ('c');
          delay(1500);
          }


 //byte blinkState = digitalRead (blinkPin);
 //    {
 //    if (millis () - blinkChange >= debounceTime)
 //       {
 //       blinkChange = millis (); // when blink state changed
 //       oldBlinkState = blinkState; // remember for next time
 //       if (blinkState == LOW) {    // change to LOW if your sensor is LOW when
 blinking
 //            blinkStartAt = blinkChange;
 //            tweenTime = blinkChange - oldBlinkStartAt;
 //            oldBlinkStartAt = blinkStartAt;
 ////            Serial.print ("Blink at: ");
 ////            Serial.print (blinkStartAt);
 ////            Serial.print ("    Time since last blink: ");
```

```
////            Serial.println (tweenTime) ;
//          }
////       else {
////          unBlinkStartAt = blinkChange;
//////          Serial.print ("UnBlink at: ");
//////          Serial.print (unBlinkStartAt);
//////          Serial.print ("    Blink length: ");
////
////          int sleep;
////          sleep=analogRead(A2);
//// sleep=sleep*0.4848;
////    Serial.print(sleep);
////
////          sleep=unBlinkStartAt - blinkStartAt;
////      //    Serial.println (sleep);
////          if(sleep>=60)
////          {Serial.print(sleep);
////
////          Serial.print ('c');
////          delay(1500);
////          }
////
////       }
```

RECEIVER

```
#include<LiquidCrystal.h>

LiquidCrystal  lcd(13,12,11,10,9,8);

const int trigPin = 4;

const int echoPin = 6;

long duration;

int distance;
void setup()

{

lcd.begin(16,2);

pinMode(trigPin, OUTPUT);

pinMode(echoPin,   INPUT);

pinMode(5,OUTPUT);//buzzer

Serial.begin(9600);

}

void loop()

{
lcd.setCursor(0,0);

lcd.print("WELCOME TO LIFI");

lcd.setCursor(3,1);

lcd.print("TECHNOLOGY");

delay(4000);
```

```
lcd.clear();
while(1)

{

digitalWrite(trigPin,            LOW);

delayMicroseconds(2);

digitalWrite(trigPin,            HIGH);

delayMicroseconds(10);

digitalWrite(trigPin,            LOW);

duration = pulseIn(echoPin, HIGH);

distance=            duration*0.034/2;

lcd.clear();          lcd.setCursor(0,0);

lcd.print("distance=");

lcd.setCursor(5,1);

lcd.print(distance);

Serial.print(distance);                    if

(distance<=20)

{

     lcd.clear();

  lcd.setCursor(0,0);
```

```
lcd.print("vehicle near by");
lcd.setCursor(3,1);
lcd.print("detected");

digitalWrite(5,1);
delay(500);
digitalWrite(5,0);
delay(500);
digitalWrite(5,1);
delay(500);
digitalWrite(5,0);
delay(500);
digitalWrite(5,1);
delay(500);
digitalWrite(5,0);
delay(500);
digitalWrite(5,1);
delay(500);
digitalWrite(5,0);
delay(500);
digitalWrite(5,1);
delay(500);
digitalWrite(5,0);
```

```
  delay(500);

  delay(800);
}

if(Serial.available()>0)
{
  char rec = Serial.read();
  if(rec=='a')
  {
    lcd.clear();
  lcd.setCursor(0,0);
  lcd.print("Rash       Drive");
  lcd.setCursor(0,1);
  lcd.print("Drive carefully");

  digitalWrite(5,1);
  delay(500);
  digitalWrite(5,0);
  delay(500);

  delay(800);
  }
 else if(rec=='b')
 {
    lcd.clear();
```

```
  lcd.setCursor(0,0);
  lcd.print("Drink and Drive");
  lcd.setCursor(0,1);
  lcd.print("Drive carefully");

  digitalWrite(5,1);
  delay(500);
  digitalWrite(5,0);
  delay(500);
  digitalWrite(5,1);
  delay(500);
  digitalWrite(5,0);
  delay(500);


  delay(800);
}
else if(rec=='c')
```

```
{
  lcd.clear();
lcd.setCursor(0,0);
lcd.print("Sleep and Drive");
lcd.setCursor(0,1);
lcd.print("Drive carefully");

digitalWrite(5,1);
delay(500);
digitalWrite(5,0);
delay(500);
digitalWrite(5,1);
delay(500);
digitalWrite(5,0);
delay(500);
digitalWrite(5,1);
delay(500);
digitalWrite(5,0);
delay(500);

delay(800);
}
```

```
}
//lcd.setCursor(0,0);
//lcd.print("ALC=");
//lcd.setCursor(9,0);
//lcd.print("SLP=");
//
//lcd.setCursor(0,1);
//lcd.print("RASH:");
//
//
//lcd.setCursor(9,1);
//lcd.print("DIS");
//lcd.setCursor(13,1);
//lcd.print(distance);
}
```

OUTPUT IMAGES

TRANSMITTER

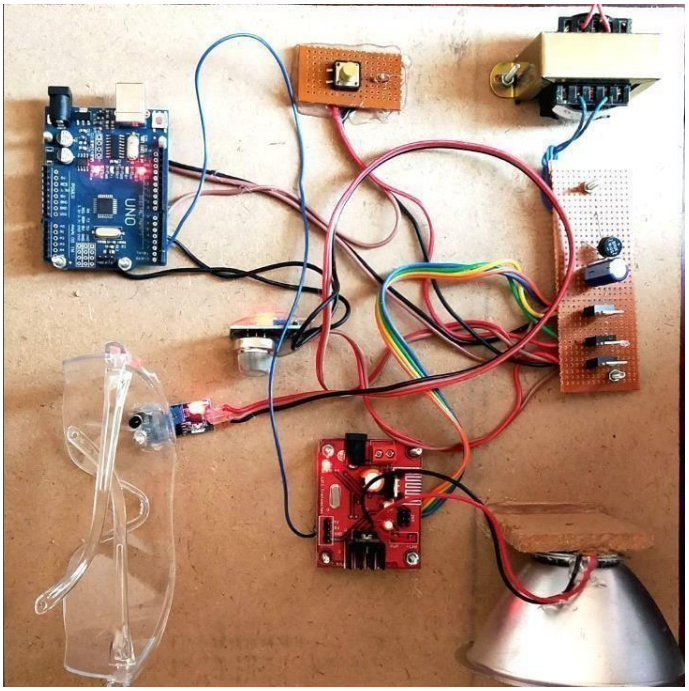

FIG 6.1.1 LIFI TRANSMITTER

The LIFI system has been connected to each vehicle. In the LIFI transmitter ,various sensor are used. They are

Eyeblink sensor

MEMS sensor

Alcohol/ Gas sensor

This sensor has been connected with a microcontroller to each vehicle. If the driver consumes alcohol ,the alcohol sensor gives information to the nearest vehicle going in front of it through LIFI transmitter. The eyeblink sensor helps to detect the drowsy state of the driver. The MEMS sensor(Micro Electro-Mechanical System) senses the axis of the car. Here using above sensors when a distraction is notified through light fidelity technology, the light transmit to the receiver side where the photovoltaic cell receives the light photons.

RECEIVER

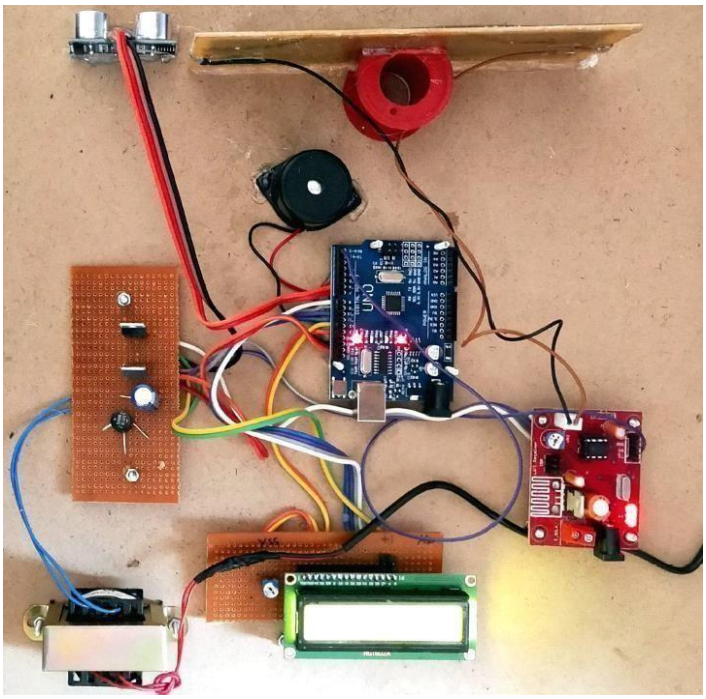

FIG 6.1.2 RECEIVER

In the LIFI receiver, ultrasonic sensor has been connected which helps to detect the distance with the other vehicle. From the photovoltaic cell, the light received from the transmitter side gives information about the vehicle's driving state whether he/she has been drowsy else there any problem with the car.

If so, based on the issue the buzzer in the receiver will proffer a sound like, if the driver is in sleeplessness condition the buzzer will make sound a single. This varies in case of tilt axis of the car and alcohol consumption. For tilting position of the car, it will lay out double tone and for detection of any gas ,it will produce more than double tone.

With the above methods ,it is possible to reduce the occurrence of accidents in road and also safety is guaranteed due to the faster wireless communication so called lifi compared to wifi technology as light is the fastest transmitter of about (3*10^8 m\s).

REFERENCE

[1] A.Sarkar, S. Agarwal and A. Nath, “Li-Fi Technology: Data Transmission through Visible Light”, International Journal of Advance Research in Computer Science and Management Studies, Volume 3, Issue 6, June 2018.

[2] X. Yang, L. Liu, N. H. Vaidya, and F. Zhao. "A vehicle-tovehicle communication protocol for cooperative collision warning", The First Annual International Conference on Mobile and Ubiquitous Systems: Networking and Services, MOBIQUITOUS 2004, pp. 114-123, IEEE, 2012.

[3] D.R. Kim, S. H. Yang, H.S. Kim, Y. H. Son and S. K. Han, “Outdoor Visible Light Communication for inter- vehicle communication using Controller Area Network”, Fourth International Conference on Communications and Electronics (ICCE), IEEE, 2012.

[4] P. Bhateley, R. Mohindra and S. Balaji, “Smart vehicular communication system using LiFi technology”, International Conference on Computation of Power, Energy Information and Communication (ICCPEIC), IEEE, 2016.

[5] I.S. Santos and P.A.P. Ferraz, “Visible Light Communication Applied on Vehicle-to-Vehicle Networks”, International Conference on Mechatronics, Electronics and Automotive Engineering (ICMEAE), IEEE, 2015.

[6] O. Ergul, E. Dinc and O.B. Akan, “Communicate to illuminate: State-of-the-art and research challenges for visible light communications”, Physical Communication 17, pp. 72–85, 2016.

[7] I. Takai, K. Yasutomi, K. Kagawa, M. Andoh and S. Kawahito, “Optical Vehicle-to-Vehicle Communication System Using LED Transmitter and Camera Receiver”, IEEE Photonics Journal, Volume 6, Number 5, October 2018.

[8] S. Nachimuthu, S.P. Chandran and B.S. Aarthi, “Design and Implementation of a Vehicle to Vehicle Communication System using Li-Fi Technology”, International Research Journal of Engineering and Technology (IRJET), volume:03 Issue: 05, May 2016.